Josef Durm and Auguste Choisy: a working relationship

Uta Hassler
Elena Pliego

Auguste Choisy and Josef Durm were great *Bauforscher* (architectural scientists and historians) of the 19th century. Each gained renown for defining and interpreting architectural periods and systematically analysing buildings. Their legacy influenced research in *Bauforschung* (the study and history of architecture) long after their deaths. Durm was contemporary with Choisy. Both worked internationally, and they were in correspondence. However, the reception of their work has been somewhat mixed, if not to say limited, particularly during the 20th century and especially in German-speaking countries. Despite his academic and historical significance, Josef Durm has not been accorded the recognition he is due. Two aspects in particular have yet to be adequately explored: Durm's and Choisy's similar modes of research and methodology, including parallels in their depiction of the history of architecture, and their polytechnic backgrounds.

From the beginning of the 19th century, the standard practice of *Bauforscher* and scholarly architects in Germany and other European countries was to analyse historic buildings by means of detailed drawings and precise written documentation. Building on this tradition, by the close of the 19th century researchers were producing series of volumes describing the history of architectural development over various periods, as well as works on individual historic buildings. As of the mid-19th century, the relatively new discipline of art history gave rise to grand exhibitions on art history and architectural history. At polytechnic institutes, which were first established in France, followed by Germany, Switzerland and other countries, architects and engineers developed a different methodology for studying architectural history. They concentrated their attention on construction

and building techniques, rather than just the pure architectural form. Investigating how a building was constructed and how it changed over time became essential to its interpretation.

Choisy and Durm exemplified the research tradition of their profession at the end of the nineteenth century. This article will describe the parallelism of their research strategies, including similarities in their depiction of buildings in their works on architectural history. It would go beyond the scope of this article to show to what extent each researcher's drawings were influenced by the illustrative methods systematically taught at their polytechnic institutes in the fields of geometry, mechanics and mechanical engineering. One may assume that Choisy in particular had mastered the illustrative methods of the French schools and developed them further in order to visually describe historic buildings.

Choisy and Durm as architectural historians with an encyclopaedic approach

Measuring and drawing the physical features of antique architecture constituted the primary source of knowledge about historic buildings throughout the entire 19th century, and they also formed the basis for defining grammatical principles for a new architectural practice. *Bauforschung* anticipated a new discipline —the history of construction— and thereby ensured its academic credibility. All through the 19th century, architects from northern European cities travelled first

Figure 1
Auguste Choisy

Figure 2
Josef Durm

to Italy and later to Egypt, Greece and around the entire Mediterranean Sea to study antique architecture, creating new categories to replace older conventions (especially those in the tradition of Vitruvius). Drawings were documentation, but they also served as a frame of reference for understanding the tenets of historic architecture and as a basis for building-research analysis and interpretation. They were indispensable as a means of authenticating the structures found which could be used to trace the development of «built heritage». To be sure, drawings were just as two-dimensional as any surviving ancient treatise, but they were closely connected to research on the actual three-dimensional structures in their existing, often damaged and altered, state.

Some of the major areas of investigation in the field of architectural history are: the evolution of architectural form; the influence of different cultures on the architectural expression of space, shape and structural elements; intercultural exchange; the study of historic building and construction techniques, including the construction techniques of façades and their effect; and advancements in the optical correction of structural elements. French researchers initially concentrated on Egyptian and Roman architectural history, while German scholars, from the beginning of the 19th century, tended to focus on the evolution of Greek architecture (Bötticher, Hirt, Schinkel, Mauch, Semper, etc.).

Auguste Choisy (1841–1909) was the most eminent French architectural scholar of his time. He studied engineering at the Ecole des Ponts et Chaussées in Paris and published a comprehensive survey of Roman architecture as early as 1873 (Choisy, *L'art de bâtir chez les Romains*). This work was to have a decisive influence on Josef Durm's *Baukunst der Römer*, published in 1885. Choisy went on to write *L'art de bâtir chez les Byzantins* (1883), *Histoire de l'architecture* (1899) and *L'art de bâtir chez les Égyptiens* (1904). Josef Durm studied at the Karlsruhe Polytechnic School, where he also worked as a professor beginning in 1867. Durm compiled the work of German researchers in several books on architectural history, and also in his ambitious series *Handbuch der Architektur*, which was meant to provide no less than a sweeping overview of the entire spectrum of academic architectural knowledge. Durm personally wrote three great surveys of architectural history in the series: *Die Baukunst der Griechen* (1881), *Die Baukunst der Etrusker; Die Baukunst der Römer* (1885) and *Die Baukunst der Renaissance in Italien* (1903).

From the mid- to late 19th century, one of the greatest challenges to researchers attempting to interpret an entire period was to find verifiable and recognizably similar sources of material. Now-legendary expeditions comprising teams of draughtsman and scholars and scientists of various disciplines set out to document foreign and domestic territories, particularly in the French research tradition. The product of one such effort was the *Description del'Egypte* which

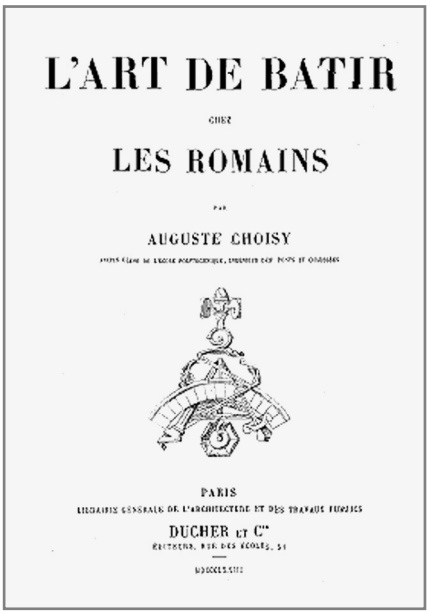

L'ART DE BATIR

CHEZ

LES ROMAINS

PAR

AUGUSTE CHOISY

PARIS

DUCHER ET CIE

Figure 3
L'art de bâtir chez les Romains (Choisy 1873)

HANDBUCH

DER

ARCHITEKTUR.

Unter Mitwirkung von Fachgenossen

herausgegeben von

Oberbaurath Professor Josef Durm

in Karlsruhe,

Baurath Professor Hermann Ende in Berlin, und Professor Dr. Eduard Schmitt in Darmstadt

Professor Heinrich Wagner in Darmstadt.

Zweiter Theil:

DIE BAUSTILE.

HISTORISCHE UND TECHNISCHE ENTWICKELUNG.

2. Band:

Die Baukunst der Etrusker.

Die Baukunst der Römer.

J. PH. DIEHL'S VERLAG IN DARMSTADT.

ARNOLD BERGSTRÄSSER.

1885.

Figure 4
Die Baukunst der Etrusker; Die Baukunst der Römer (Durm 1885)

appeared between 1808 and 1828, ranging from descriptions of antique architecture to discourses on natural history and topography.

The early works of James Stuart and Nicholas Revett were milestones of the English research tradition. As early as the close of the 18th century, they provided elementary knowledge about ancient Greek architecture, which in turn was supplemented and improved on by many other European scholars. From the mid-19th century on, art historians increasingly focused their attention on the architectural heritage of Italy and Rome, linking ancient architectural practice to findings from the nascent study of the Renaissance. Josef Durm and Auguste Choisy belonged to a generation that was familiar with the older research. They had studied the works of Karl Friedrich Schinkel, Friedrich Weinbrenner, August Bötticher and, of course, Alois Hirt and Heinrich Hübsch. They had read the travelogues of the early naturalists and were acquainted with the French encyclopaedists' illustrative style, including their careful renditions of manufacturing processes and industrial techniques.

Nonetheless, the first *Bauforscher*, writing the first interpretive works on architectural periods, had to rely on their own observations of historic material as an important source on which to base their arguments. Their travels helped them to compare, sort and add to the information they had found in books; travelling also enabled them to study historic objects in the original, acquiring hands-on knowledge impossible to gain merely from reading. Auguste Choisy and Josef Durm exemplified in their work this process of gaining knowledge at the source, interpreting it and further developing existing analyses. Both travelled, both had widely read European literature, and each was familiar with the other's writings. They made reference to each other several times. Choisy published drawings by Durm in his *Histoire de l'architecture* (1899), while Durm's *Die Baukunst der Griechen* (1881) and *Die Baukunst der Etrusker; Die Baukunst der Römer* (1885) contained drawings by Choisy.

Compositions of segments, layouts and diagonal perspectives, frequently drawn as if seen from below, are characteristic of Choisy's (and in some respects Viollet le Duc's) axonometric projections. Layouts and diagonal views of buildings were thus combined into a single perspective drawing. The drawings, however, generally reduced the buildings' construction to idealized geometries. Durm also employed diagonal perspectives in his drawings and combined layouts with perspectives. The use of the diagonal perspective allowed the author to efficiently capture the constructive logic of the component parts portrayed.

As a *Bauforscher*, Josef Durm critically evaluated Choisy's style of illustration. In contrast to Choisy, Durm generally endeavoured to portray historic buildings and their components in their unique, existing state rather than in an idealized form. However, any rendering of segments, views and perspectives of a building for a publication on architectural history entailed simplifying, stylizing and idealizing the «actual structure» onto a projection plane. Drawings conformed to the constraints imposed by the printing press and the available formats, with the usual differences in scale, visual codes and legends. All drawings are but abstract representations; ideally, they depict the grammatical rules and existing condition of a structure in all of its complexity. The challenge of providing an overview of a vast architectural heritage and the need to choose objects of reference in order to explain architectural evolution necessarily meant dispensing with detail and any claim to a «complete collection».

Choisy's great achievement was to create in his works a comprehensive survey of architecture in which the objects portrayed were arranged as a reference collection—a first bold attempt to grasp the evolution of architecture. It was not Josef Durm's intention to write a grand overview of the history of world architecture; rather, he confined his great works on historic architecture to the interpretation of periods in specific regions: Greek, Roman, Renaissance architecture in Italy, all of

places he knew intimately from his travels. Durm extended the encyclopaedic concept of a comprehensive scholarly survey to the entire spectrum of architectonic knowledge. He produced the series *Handbuch der Architektur*, which grew to over one hundred volumes. Durm personally wrote three volumes on architectural history, which remained the only works on this subject in the series.

Durm was the quintessential Polytechnic School student, and later professor, of architecture. He possessed interest in academic inquiry into architectural history, engineering ability, a talent for drawing, didactical aspirations and healthy self-esteem as a civil servant and long-standing professor. For several decades he worked as a professor of architectural studies at the Polytechnic School whilst functioning as director of the *Staatliche Bauverwaltung* (national building authority), directing public works, publishing, lecturing, mentoring an international group of students and maintaining correspondence with leading international experts. His enthusiasm for the study of historic architecture was almost certainly kindled when he received a travel grant from Grand Duke Friedrich I of Baden which allowed him to go on an extended tour of Italy (1866–67). In his capacity as the director of public works, Durm carried out manifold public building projects. The University of Karlsruhe and Heidelberg University owe many of their buildings to Durm. He designed notable, representative buildings for the family of the Grand Duke as well as churches and building complexes such as the main cemetery of the City of Karlsruhe, his home town. Durm's architectural oeuvre has yet to be adequately assessed. Aside from Ulrike Grammbitter's doctoral thesis and a few articles, little has been written about Durm's legacy as a professional architect. Durm's teaching activities at the Polytechnic School and his highly successful term as Head of Department came to an end amid rather bitter disputes. Even before the First World War it became apparent that the new generation of reformers entering the School had no intention of upholding the polytechnic tradition established by the older professors. Durm's neo-Renaissance style of architecture was summarily rejected, as was his conviction that knowledge of architectural heritage was indispensible as a basis for the creation of new architectural design.

Durm was as prolific an author and researcher of architectural history as he was an architect, yet no facet of his work has received the scholarly attention it rightfully deserves. Some of his legacy will be discussed in a project by the *Deutsche Forschungsgemeinschaft* (DFG), entitled: «Josef Durm und das Handbuch der Architektur als Wissensspeicher» («Josef Durm and his *Handbuch der Architektur* as a Repository of Knowledge»). The project is being carried out at the Institute of Historic Building Research and Conservation (IDB), ETH Zurich.

After his first articles had appeared in the *Deutsche Bauzeitung* (starting in 1867), Durm regularly published on the research he conducted during his travels.

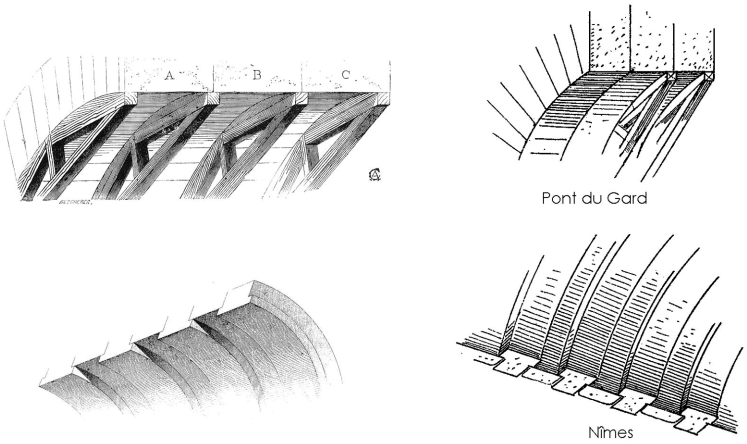

Figure 5
Vaults in Narni, Nîmes and the Pont du Gard

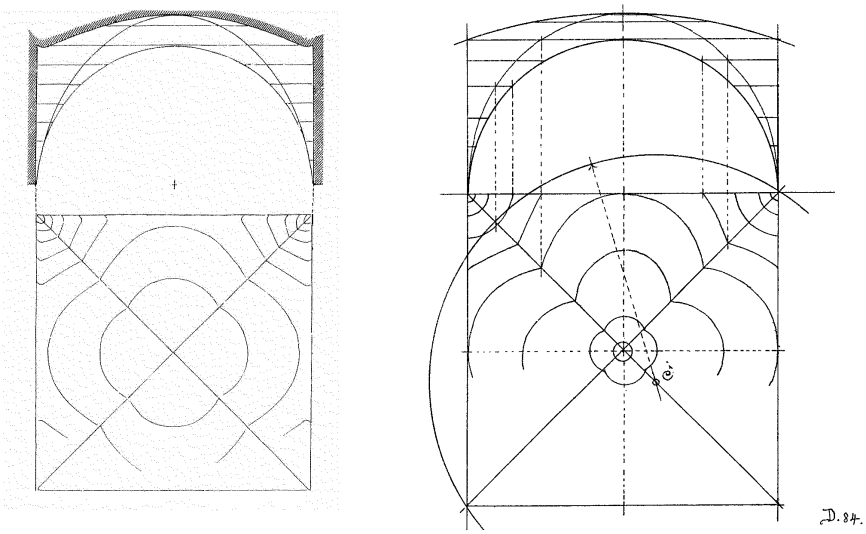

Figure 6
Cross vault. Both scholars used the same schematic view of the layout and various vertical sections to explain the construction of this cross vault, which features round diagonal arches

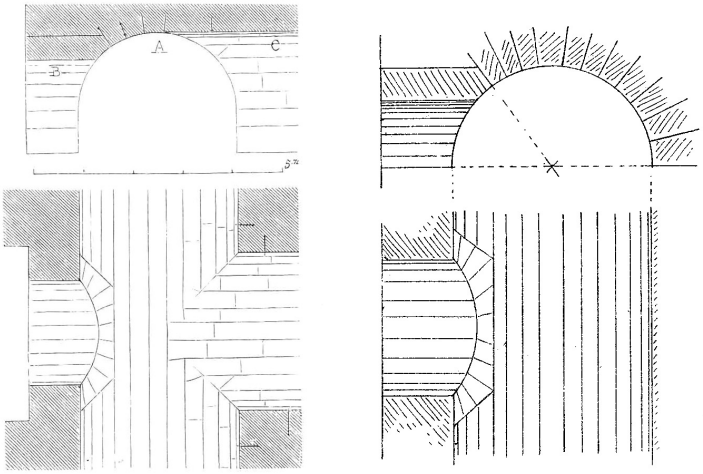

Figure 7
Cross vault made of stone blocks

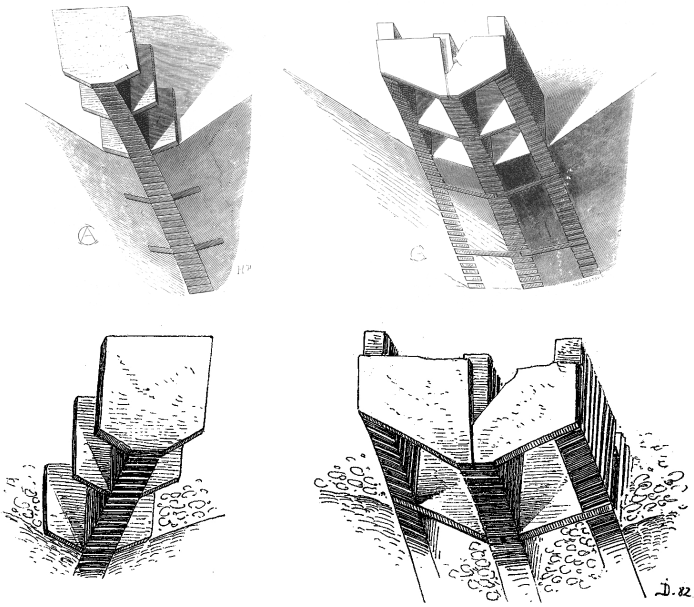

Figure 8
Brick and cast-wall ribs of a cross vault

His major volumes on Greek, Roman and Renaissance architecture were complemented by papers on various individual aspects. In 1876 Durm began publishing the *Handbuch der Architektur* series in cooperation with engineers.

Josef Durm based all of his publications on material gathered during his frequent, extensive travels —among other places to Greece, Asia Minor, Syria, Palestine, Egypt, Tunisia, England and France. We know of a total of twenty-one longer trips of Durm's, mostly to Italy (Grammbitter 1984). In an article published in 1979, Klaus Schwirkmann estimated that Durm produced approximately 30,000 drawings during his travels (Schwirkmann 1979). Some of Durm's sketchbooks and a number of individual drawings have been preserved at the *Staatliche Kunsthalle* in Karlsruhe. Unfortunately, the bulk of Durm's measurements, preliminary sketches for his books and his entire personal collection were destroyed during the Second World War. However, a large collection of Durm's draughts for his architectural projects has been preserved at the *Badische Generallandesarchiv*.

The Purpose of the *Handbuch der Architektur* and its Volumes on Architectural History

Durm started the *series Handbuch der Architektur* in 1881 together with Hermann Ende in Berlin and Eduard Schmitt in Darmstadt. Their goal was to «create a work that is at least as good as foreign publications» (Grammbitter 1984). The *Handbuch* was intended to be an encyclopaedia of architecture. It was divided into four general sections, whereby, in accordance with the polytechnic school of thought, historical and technical aspects of construction were considered to be interrelated. The sections were as follows:

1. *Allgemeine Hochbaukunde* (General Structural Design and Construction Theory)
2. *Die Baustile* (Historic and Technical Evolution of Architectural Design)
3. *Die Hochbau-Constructionen* (Building Construction)
4. *Entwerfen, Anlage und Errichtung der Gebäude* (Building Design, Structure and Construction)

Each section comprised many volumes which were written by various authors. Durm contributed to several volumes and wrote three major works on architectural history in the second section, *Die Baustile*: *Die Baukunst der Griechen* (1881), *Die Baukunst der Etrusker; Die Baukunst der Römer* (1885) and *Die Baukunst der Renaissance in Italien* (1903). The first section, «Allgemeine Hochbaukunde», covered general information about construction techniques and

materials. The second section, Die Baustile, was dedicated to the history of architecture during various periods. The third section, «Die Hochbau-Constructionen», begins with construction-related topics, but also contains information on construction materials and components, interior design (especially with regard to lighting, air circulation, heating and water) and building infrastructure (burglary prevention measures, fire prevention measures, acoustics systems, etc.). The fourth section, «Entwerfen, Anlage und Errichtung der Gebäude», is mainly about «architectonic composition».

Choisy as Durm's role model

Josef Durm often made reference to Auguste Choisy in his works. Although he commented positively on Choisy's illustrative style, Durm made it clear that the drawings tended to simplify their subjects and that he preferred more realistic depictions of unique, historic structures: «Choisy's illustrations in his excellent works portray constructions as more beautiful than they actually are» (Durm 1885). Elsewhere, Durm remarked: «Let us consider Choisy's work L'art de bâtir chez les Byzantins (Paris 1883), which is just as clear and reliable a treatise as his first work, L'art de bâtir chez les Romains (Paris 1876), the contents of which I have often been able to compare to the actual objects in their original places, and which I have always found to be accurate. His conclusions are as inspired, transparent, simple and logical as his illustrations and drawings, except that the latter are usually too beautiful» (Durm 1885).

It is interesting to note that Choisy was aware that illustrations always serve an educational purpose. For instance, he candidly mused about the appropriate way to portray Roman construction methods in his drawings: «et l'incorrection des formes y est quelquefois si grande, que j'ai dû, pour rendre intelligible la pensée des constructeurs, attribuer dans mes dessins une régularité aux armatures, que l'examen des ruines purrait dans plus d'un cas démentir». (Choisy 1873). The drawings presented here originate from Durm's work *Die Baukunst der Römer* and were based on his travel sketches. There are more references to Choisy in the chapter «Balkendecken und Gewölbe» («Wood-beam Ceilings and Vaults»), though he is not always explicitly named.

Both scholars considered first-hand knowledge of the structures they discussed to be imperative, as they maintained in the forewords to their works. Durm, for instance, wrote: «I have seen, studied and made drawings of almost everything I have mentioned here, whether in fields of ruins or in the museums of our great cities» (Durm 1909, foreword), and elsewhere: «The following is based on my own observations and studies . . . I have personally seen, studied

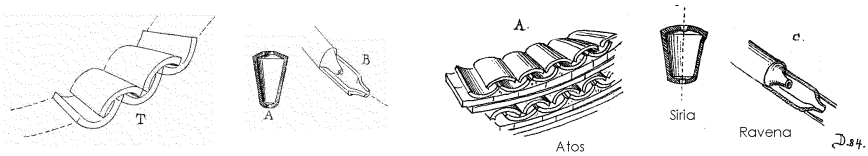

Figure 9
Cast wall with embedded pottery

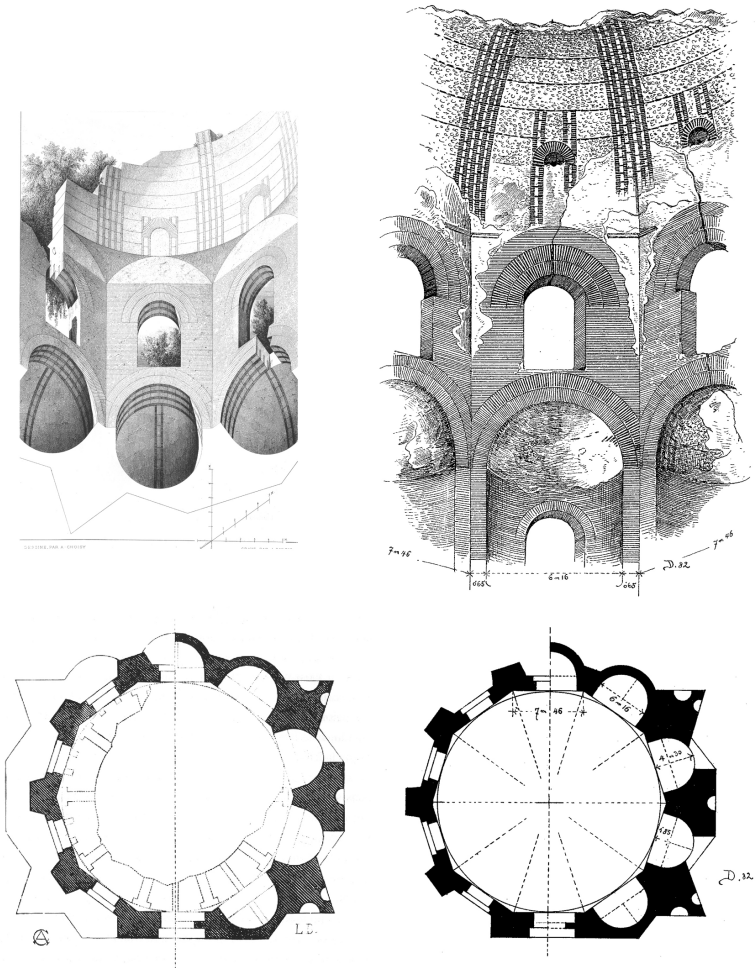

Figure 10
Domes above polygonal rooms. Minerva Medica in Rome

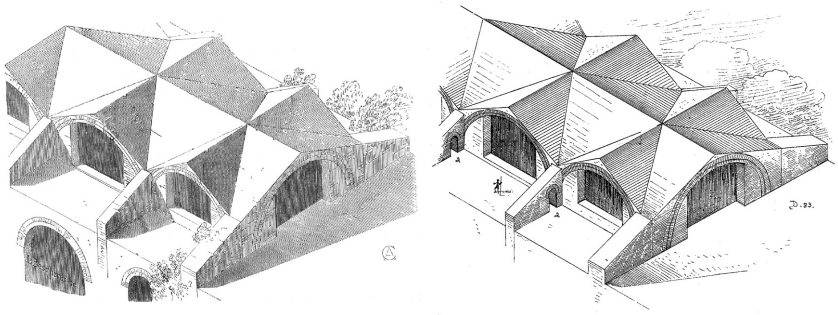

Figure 11
Buttresses. Sainte Marie des Anges

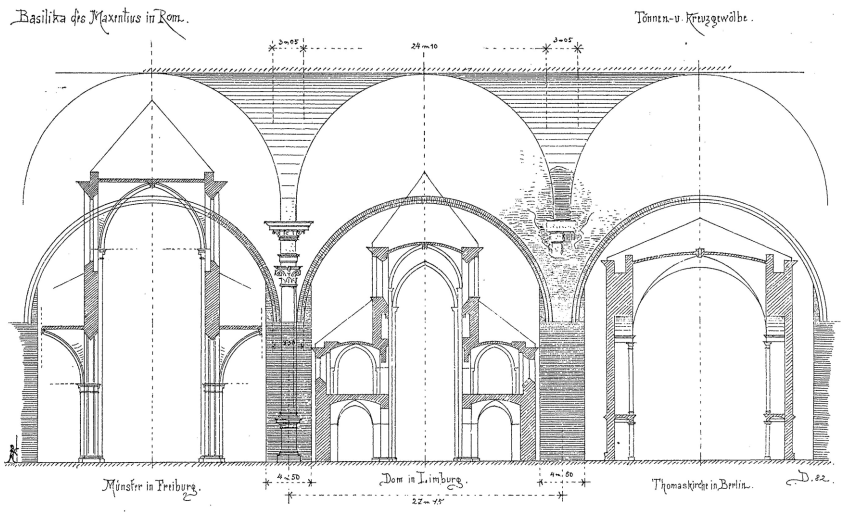

Figure 12
Basilica of Maxentius in Rome

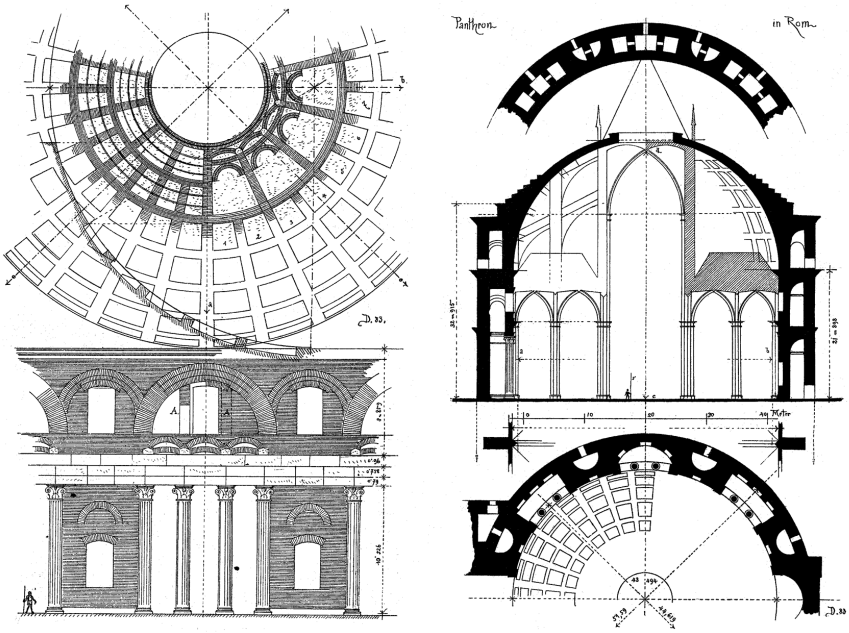

Figure 13
Dome of the Pantheon in Rome

and made drawings of everything described here» (Durm 1913, foreword to the second edition).

Studying historic structures on the spot became established the standard practice and challenge of the German *Bauforschung* tradition after Josef Durm's time. Furthermore, the practice of sketching and analysing original historic structures distinguished *Bauforschung* practice from the techniques developed by art historians. Josef Durm's precise observations of historic sources did not always lead to correct conclusions, however. One notable example of his mistakes was the controversy surrounding the curvature of the components of the Parthenon, which Durm's contemporary colleague Francis Penrose more accurately measured and interpreted. Nonetheless, Durm's and Choisy's innovative surveys of historic architecture and their development of state-of-the-art methods of analysis were lasting achievements. Choisy wrote in the forward to an earlier work (1873): «aussi je me suis imposé comme une condition expresse de ne citer aucune circonstance sans en avoir constaté personnellement l'exactitude, ou sans faire connaître par des indications formelles les sources où j'ai puisé» (Choisy 1873, foreword).

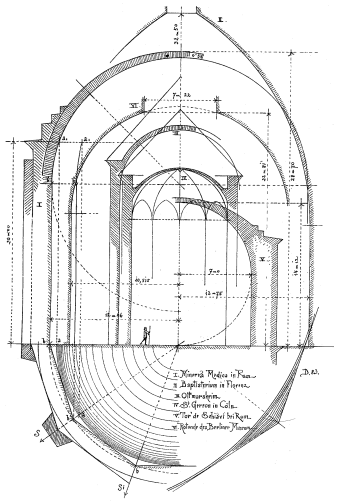

Figure 14
Comparison of room sizes

In the following, drawings by Durm (right) will be compared with ones by Choisy (left) which may have served Durm as models.

Finally, it is worth mentioning the tradition of comparing the sizes of historic structures and components which has become standard practice in measurement analysis. Choisy had already begun to make size comparisons and draw buildings to scale. Durm introduced compilations of building elements according to size, and he pointed out differences of scale in comparative illustrations (figure 12). Domes and their diameters interested him particularly. He included measurements in his drawings as a matter of course. The research tradition that continued Durm's legacy naturally recorded buildings in a non-idealized fashion; the representation of existing structures was systematically kept separate from the discussion of «ideal proportions».

Reference list

Choisy, A. 1873. *L'art de bâtir chez les Romains*. Paris: Libraire générale de l'architecture et des travaux publics

Choisy, A. 1883. *L'art de bâtir chez les Byzantins*. Paris: Société Anonyme des Publications Périodiques

Choisy, A. 1899. *Histoire de l'architecture*. Paris: Gauthier-Villars, 2 vol.

Choisy, A. 1904. *L'art de bâtir chez les Égyptiens*. Paris: Rouveyre

Choisy, A. 1909. *Vitruve*, Paris: Imprimirie-Libraire Lahure. 4 vol.

Durm, J. 1881. *Handbuch der Architektur. Zweiter Teil: Die Baustile. Historische und technische Entwicklung. Band 1: Die Baukunst der Griechen*. Darmstadt

Durm, J. 1885. *Handbuch der Architektur. Zweiter Teil: Die Baustile. Historische und technische Entwicklung. Band 2: Die Baukunst der Etrusker. Die Baukunst der Römer*. Darmstadt

Durm, J. 1887. «Zwei Grossconstructionen der italienischen Renaissance. Die Domkuppel in Florenz und die Kuppel der Peter's Kirche in Rom», *Zeitschrift für Bauwesen* v.37, Berlin, col. 353–374, 481–500, pl. 43–46

Durm, J. 1895. «Der Parthenon und seine Beschädigungen durch das Erdbeben 1894», *Deutsches Archäologisches Institut, Jahrbuch 1895* v.10, 100–102

Durm, J. 1902. «Die Kuppel der Maria dell' Umiltá in Pistoja und die Kuppel der Sta. Maria di Carignano in Genua». Berlin

Durm, J. 1903. *Handbuch der Architektur. 5. Band: Die Baukunst der Renaissance in Italien,* Stuttgart

Durm, J. 1908. «Die Bauformlehre», *Lehrbuch des Hochbaus.* Leipzig: Karl Esselborn.

Grammbitter, Ulrike. 1984. *Joseph Durm: 1837–1919, eine Einführung in das Architektonische Werk*. München: tuduv-Verlagsges.

Schwirkmann, Klaus. 1979. «Josef Durm (1837–1919), Grosshersoglich-badischer Oberbaudirektor». *Jahrbuch der Staatlichen Kunstsammlungen in Baden Württemberg*, v.16: 117–144. Karlsruhe